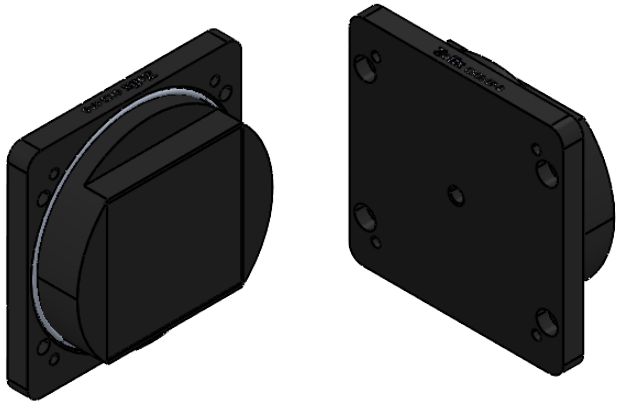

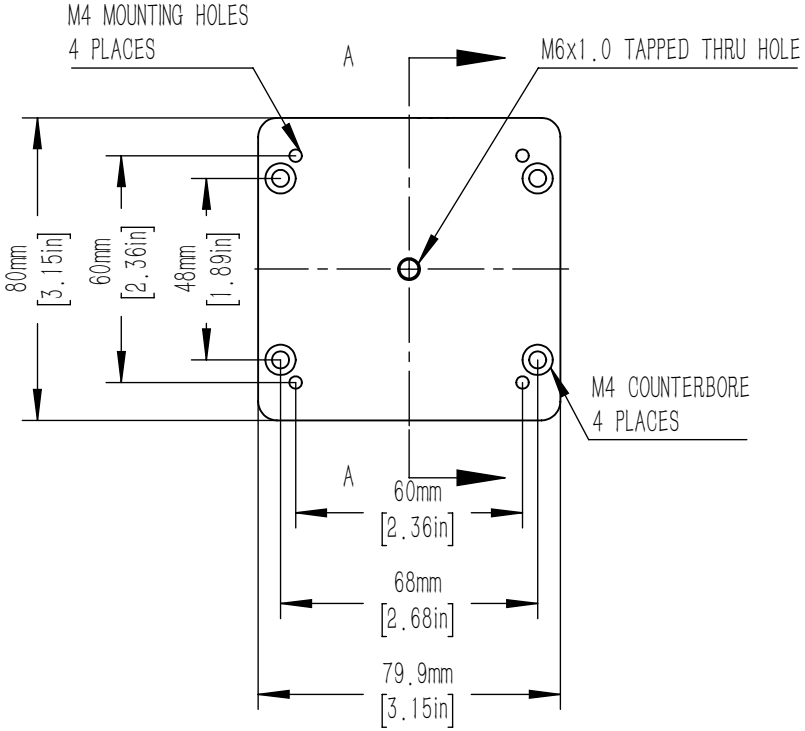

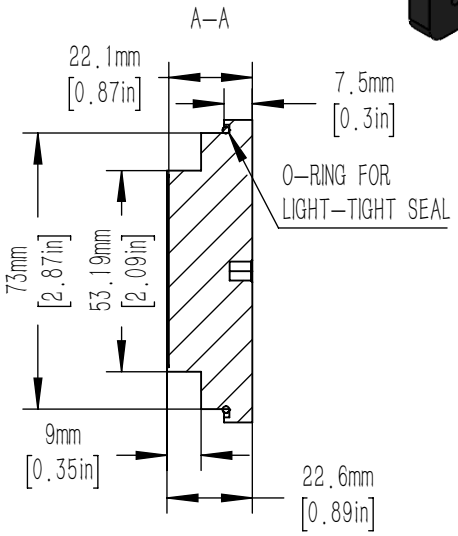

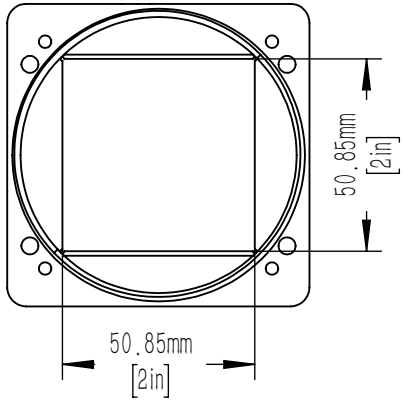

DRAWING PROJECTION			CSC2–CP–B	Zolix		
	NAME	DATE				
DRAWN	NIC	6th/Nove/2025	BEAMSPLITTER CUBE BASEPLATE	MATERIAL	WEIGHT	SCALE	REV
APPROVAL	DICK	6th/Nove/2025		FOLLOW THE PARTS	0.275	1:2	V1
THE DRAWINGS ARE ONLY FOR TYPE SELECTION INFORMATION				shop.zolix.com.cn			