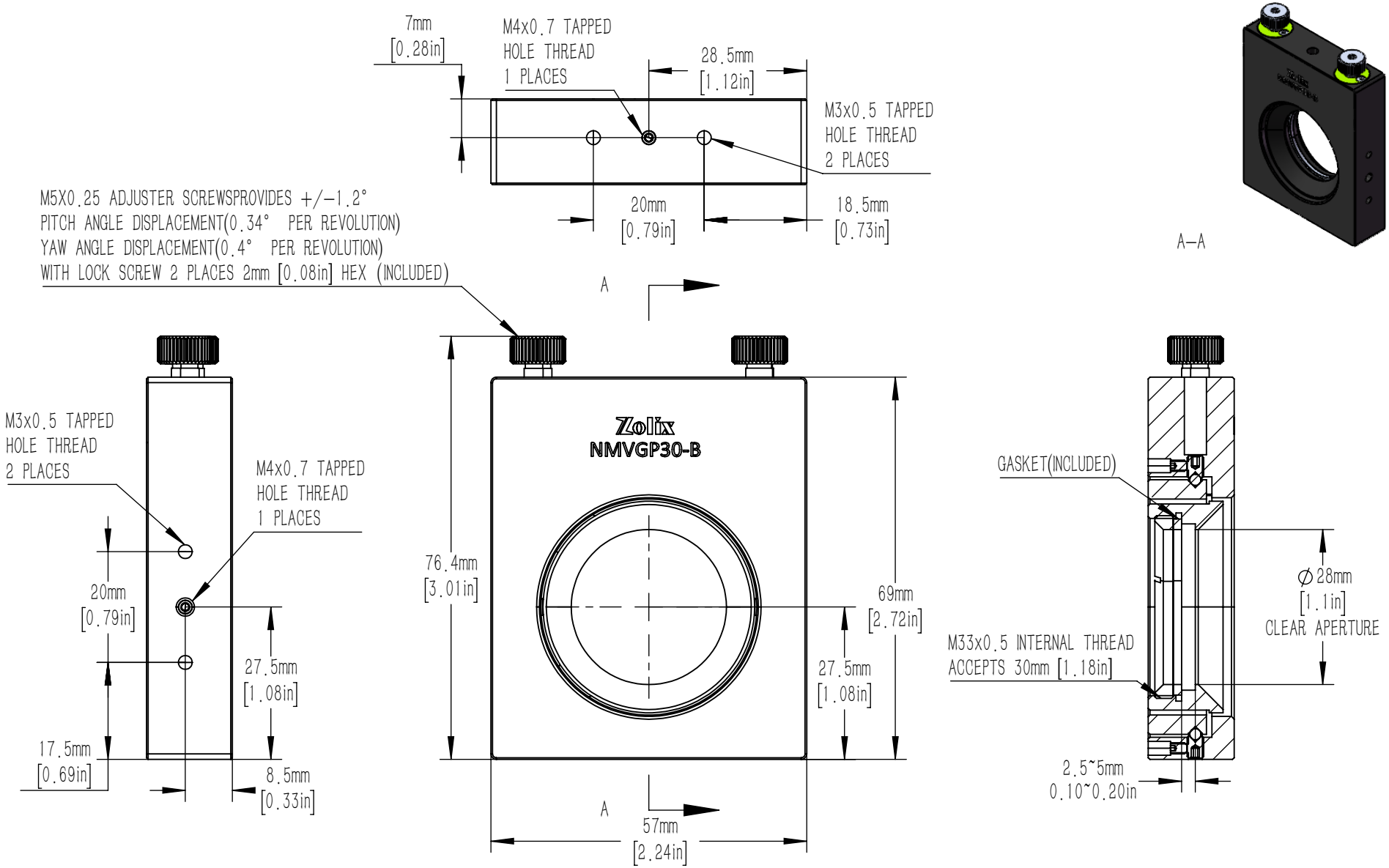

DRAWING PROJECTION			NMVGP30-B	Zolix		
	NAME	DATE				
DRAWN	NIC	1st/Feb/2026	UPPER-ADJUSTABLE UNIVERSAL BEAM SPLITTER MOUNT	MATERIAL	WEIGHT	SCALE	REV
APPROVAL	DICK	1st/Feb/2026		FOLLOW THE PARTS	0.118	1:1	V1
THE DRAWINGS ARE ONLY FOR TYPE SELECTION INFORMATION				shop.zolix.com.cn			