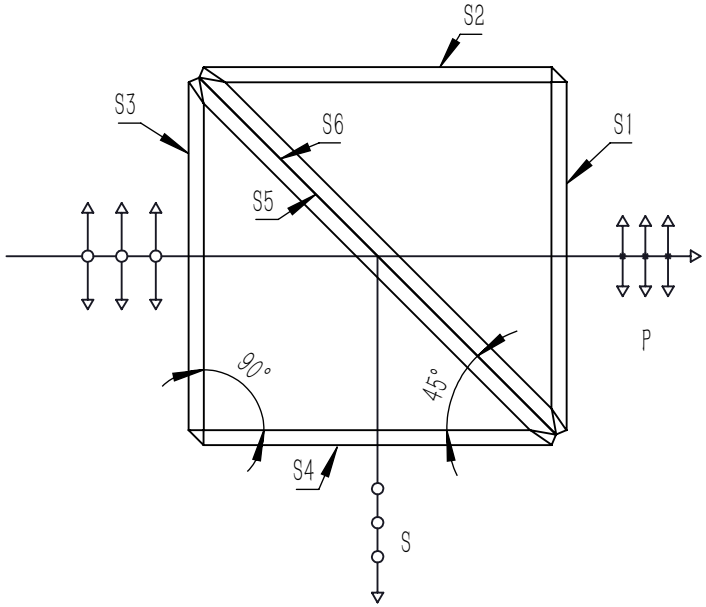

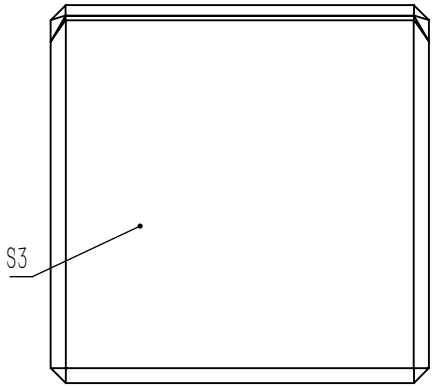

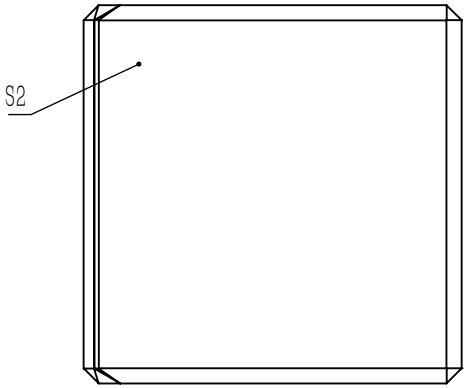

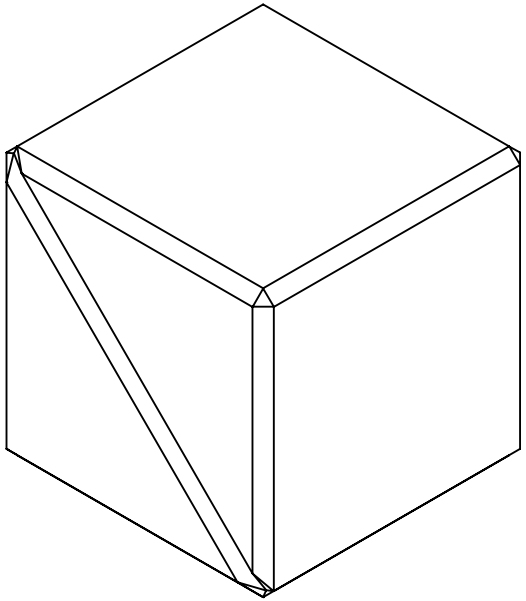

NOTES

1. CLEAR APERTURE: >80% WxL
2. DIAMETER TOLERANCE: +0.0/−0.2 mm
3. EXTINCTION RATIO(Tp:Ts): >2000:1
4. DESIGN WAVELENGTH: 266 nm
5. TRANSMITTED BEAM DEVIATION: ⩽0° ±5 arcmin
6. REFLECTED BEAM DEVIATION: ⩽90° ±5 arcmin
7. SURFACE QUALITY(S/D): 40/20
8. WAVEFRONT ERROR(RMS): <λ/4@633 nm
9. PARALLELISM(S1,S2,S3,S4): ⩽10 arcsec
10. AR COATING(S1,S2,S3,S4): V Coating @266 nm, Rabs<0.25%,6° AOI, single face
11. S POLARIZATION REFLECTION: >99.5%
12. P POLARIZATION TRANSMISSION: >95%
13. CHAMFER: <0.5 mm×45°
14. OPERATING TEMPERATURE: −50C° ~90C°
15. GLUED(S5,S6): LIGHT GLUE PROCESS

DRAWING PROJECTION			PBS12−266HP	Zolix		
	NAME	DATE				
DRAWN	NIC	21/October/2025	POLARIZATION BEAM SPLITTER	MATERIAL	WEIGHT	SCALE	REV
APPROVAL	DICK	21/October/2025		FOLLOW THE PARTS	0.000	10:1	
THE DRAWINGS ARE ONLY FOR TYPE SELECTION INFORMATION				shop.zolix.com.cn			